Jinbo Marine

Marine & Offshore Equipment Datasheet

PRODUCT DATASHEET

GENERAL EMERGENCY ALARM SYSTEM

BBJ-12 Explosion-proof Status Warning Light

ISO9001 Supplier

Class Certificate

Export Supply

BBJ-12 Explosion-proof Status Warning Light Power Supply: AC220V/230V(BBJ-12-AC220V/230V)   AC110V(BBJ-12-AC110V)...

Key Highlights

Category	General Emergency Alarm System
Standard	GB
Weight / Size	IP66/68 Weight:
Certificate	ABS, LR, BV, DNVGL, NK, KR, IRS, RMRS, CCS

We can supply according to your requirement, drawings, class certificate needs, and delivery schedule.

Technical Specifications

Category	General Emergency Alarm System	Model / SKU	BBJ-12-Explosion-proof-Status-Warning-Light
Standard	GB	Weight / Size	IP66/68 Weight:
Certificate	ABS, LR, BV, DNVGL, NK, KR, IRS, RMRS, CCS	Warranty	12 Months unless specified otherwise
Origin	China		

China BBJ-12 Explosion-proof Status Warning Light:

BBJ-12 Explosion-proof Status Warning Light

0.075122s

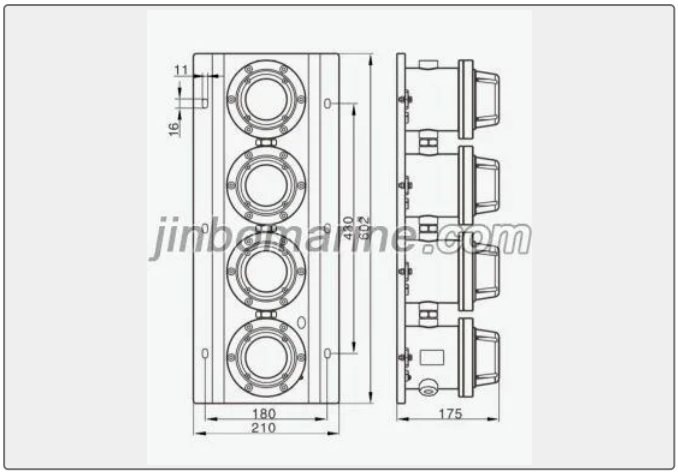

Power Supply: AC220V/230V(BBJ-12-AC220V/230V)

AC110V(BBJ-12-AC110V)

DC24V(BBJ-12-DC24V)

Power: 12W

Color: Yellow

IP class: IP66/68

Weight: 19Kg

Power: 12W

Explosion-proof class: Ex db IIC T5 Gb

Stuffing box cable entrance hole size: 2-Φ17mm

0.075122s