Jinbo Marine

Marine & Offshore Equipment Datasheet

PRODUCT DATASHEET

GENERAL EMERGENCY ALARM SYSTEM

BJ-5J/5Z Audible And Visual Alarm Unit

BJ-5J/5Z Audible And Visual Alarm Unit Power supply: AC220V±10%(BJ-5J)   DC24V -25% +30% (BJ-5Z) Power: 15W Sound pressure level: 100~116dB ...

ISO9001 Supplier

Class Certificate

Export Supply

Key Highlights

Category	General Emergency Alarm System
Standard	EN
Weight / Size	IP56 Weight:
Certificate	ABS, LR, BV, DNVGL, NK, KR, IRS, RMRS, CCS

We can supply according to your requirement, drawings, class certificate needs, and delivery schedule.

Technical Specifications

Category	General Emergency Alarm System	Model / SKU	BJ-5J-5Z-Audible-And-Visual-Alarm-Unit
Standard	EN	Weight / Size	IP56 Weight:
Certificate	ABS, LR, BV, DNVGL, NK, KR, IRS, RMRS, CCS	Warranty	12 Months unless specified otherwise
Origin	China		

China BJ-5J/5Z Audible And Visual Alarm Unit:

BJ-5J/5Z Audible And Visual Alarm Unit

0.088887s

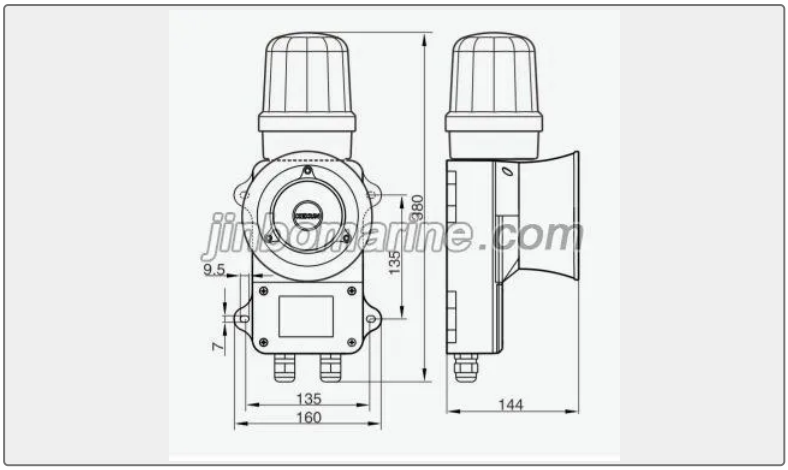

Power supply: AC220V±10%(BJ-5J)

DC24V -25% +30% (BJ-5Z)

Power: 15W

Sound pressure level: 100~116dB

Color: Red (RAL3020)

IP class: IP56

Weight: 2.0/1.7Kg

Stuffing box cable entrance hole size: 2-Φ18mm

Red, yellow or others for lamp cover are.

0.088887s