Jinbo Marine

Marine & Offshore Equipment Datasheet

PRODUCT DATASHEET

MARINE PRESSURE INSTRUMENT

Depth Gauge For Ships

Product Description: Model:YC-150S,YC-200S Measure range:0-30~600m Accuracy: 1.6,2.5   Dial diameter:150mm ,200mm Application:measure external depth for ships Dra...

ISO9001 Supplier

Class Certificate

Export Supply

Key Highlights

Category	Marine Pressure Instrument
Certificate	CCS.GL,LR,BV,ABS,DNV,RINA,NK,KR and EC certificate.

We can supply according to your requirement, drawings, class certificate needs, and delivery schedule.

Technical Specifications

Category	Marine Pressure Instrument	Model / SKU	Depth-Gauge-For-Ships
Certificate	CCS.GL,LR,BV,ABS,DNV,RINA,NK,KR and EC certificate.	Warranty	12 Months unless specified otherwise
Origin	China		

CONTENTS

- Product Description:
- Drawing of Depth Gauge For Ships:

Product Description:

Model:YC-150S,YC-200S

Measure range:0-30~600m

Accuracy: 1.6,2.5

Dial diameter:150mm ,200mm

Application:measure external depth for ships

0.040810s

Drawing of Depth Gauge For Ships:

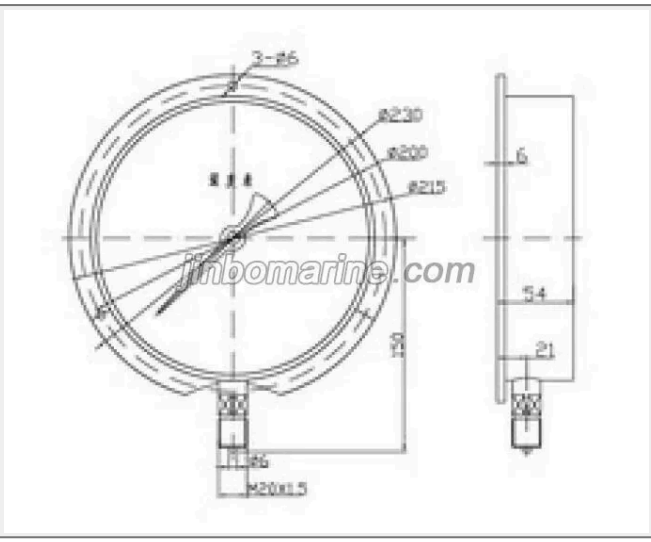

0.040810s