Jinbo Marine

Marine & Offshore Equipment Datasheet

PRODUCT DATASHEET

MARINE ELECTRICAL INSTRUMENT

F96-DC Stern Shaft Tachometer

F96-DC Stern Shaft Tachometer Size:96X96X114 Singal voltage:0±10V Measuring range:0±200R/MIN   0±600R/MIN Install hole size: 92X92 Used for measuring stern shaft speed F96-DC Stern Shaft T...

ISO9001 Supplier

Class Certificate

Export Supply

Key Highlights

Category	Marine Electrical Instrument
Weight / Size	F96-DC Stern Shaft Tachometer Size:96X96X114 Singal voltage:0±10V Measur...
Certificate	ABS, LR, BV, DNVGL, NK, KR, IRS, RMRS, CCS

We can supply according to your requirement, drawings, class certificate needs, and delivery schedule.

Technical Specifications

Category	Marine Electrical Instrument	Model / SKU	F96-DC-Stern-Shaft-Tachometer
Weight / Size	F96-DC Stern Shaft Tachometer Size:96X96X114 Singal voltage:0±10V Measuring range:0±200R/MIN 0±600R/MIN Install hole size:	Certificate	ABS, LR, BV, DNVGL, NK, KR, IRS, RMRS, CCS
Warranty	12 Months unless specified otherwise	Origin	China

CONTENTS

- F96-DC Stern Shaft Tachometer
- F96-DC Stern Shaft Tachometer Drawing

F96-DC Stern Shaft Tachometer

Size:96X96X114
Singal voltage:0±10V
Measuring range:0±200R/MIN 0±600R/MIN
Install hole size: 92X92
Used for measuring stern shaft speed

0.070642s

F96-DC Stern Shaft Tachometer Drawing

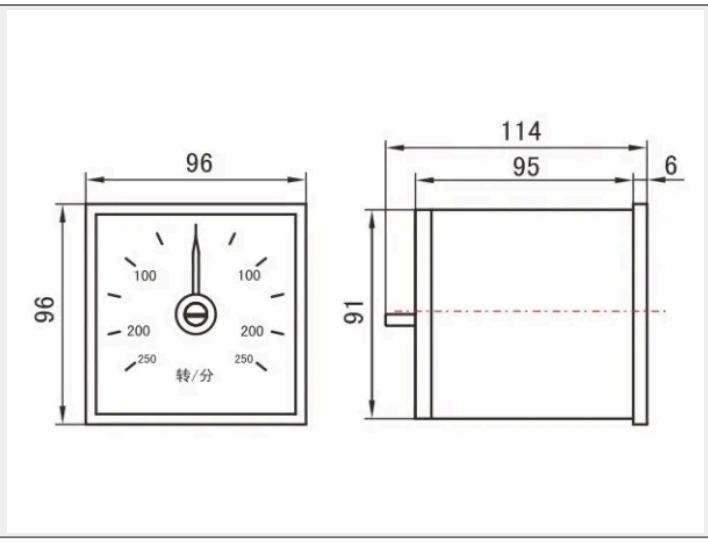

0.070642s