Jinbo Marine

Marine & Offshore Equipment Datasheet

PRODUCT DATASHEET

MARINE ELECTRICAL INSTRUMENT

F96-DC Tachometer

F96-DC Tachometer Size:96X96X114 Singal voltage:0~10V Singal current: 4~20mA Measuring range:0~600R/MIN   0~800R/MIN Install hole size: 92X92 Fixed hole distance:64X64, 4-Ø5 Speed measurement ...

ISO9001 Supplier

Class Certificate

Export Supply

Key Highlights

Category	Marine Electrical Instrument
Standard	EN
Weight / Size	F96-DC Tachometer Size:96X96X114 Singal voltage:0~10V Singal current:
Certificate	ABS, LR, BV, DNVGL, NK, KR, IRS, RMRS, CCS

We can supply according to your requirement, drawings, class certificate needs, and delivery schedule.

Technical Specifications

Category	Marine Electrical Instrument	Model / SKU	F96-DC-Tachometer
Standard	EN	Weight / Size	F96-DC Tachometer Size:96X96X114 Singal voltage:0~10V Singal current:
Certificate	ABS, LR, BV, DNVGL, NK, KR, IRS, RMRS, CCS	Warranty	12 Months unless specified otherwise
Origin	China		

CONTENTS

- F96-DC Tachometer
- F96-DC Tachometer Drawing

F96-DC Tachometer

Size:96X96X114
Singal voltage:0~10V
Singal current: 4~20mA
Measuring range:0~600R/MIN 0~800R/MIN

0.071827s

Install hole size: 92X92
Fixed hole distance:64X64, 4-Ø5
Speed measurement for main and auxiliary engine

F96-DC Tachometer Drawing

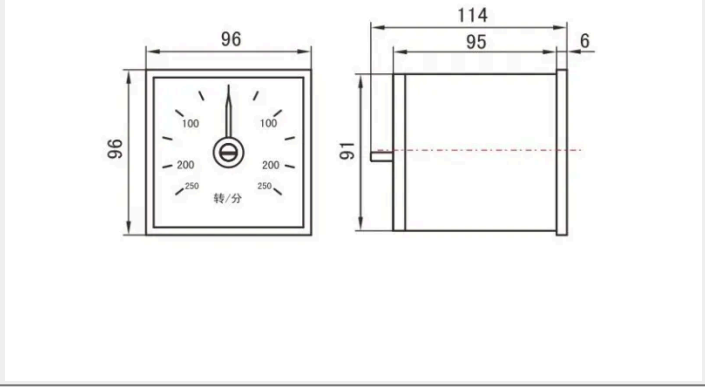

0.071827s