Jinbo Marine

Marine & Offshore Equipment Datasheet

PRODUCT DATASHEET

CHAFE CHAIN

Grade 3 84mm Chafe Chain

Chafe Chain 84mm Size

ISO9001 Supplier

Class Certificate

Export Supply

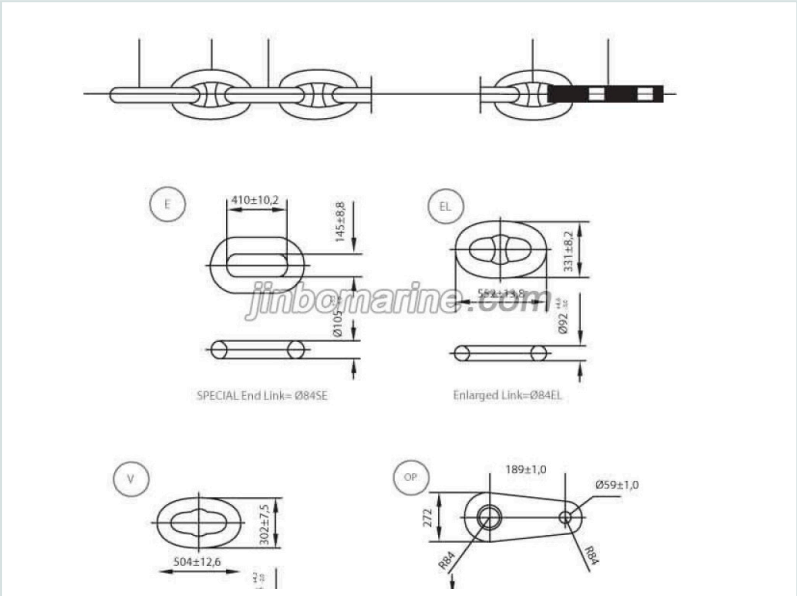

jinbomarine.com

Key Highlights

Category	Chafe Chain
Material	Alloy Steel
Weight / Size	Chafe Chain 84mm Size
Certificate	ABS, LR, BV, DNVGL, NK, KR, IRS, RMRS, CCS

We can supply according to your requirement, drawings, class certificate needs, and delivery schedule.

Technical Specifications

Category	Chafe Chain	Model / SKU	Grade-3-84mm-Chafe-Chain
Material	Alloy Steel	Weight / Size	Chafe Chain 84mm Size
Certificate	ABS, LR, BV, DNVGL, NK, KR, IRS, RMRS, CCS	Warranty	12 Months unless specified otherwise
Origin	China		

0.048719s

Chafe Chain 84mm Size

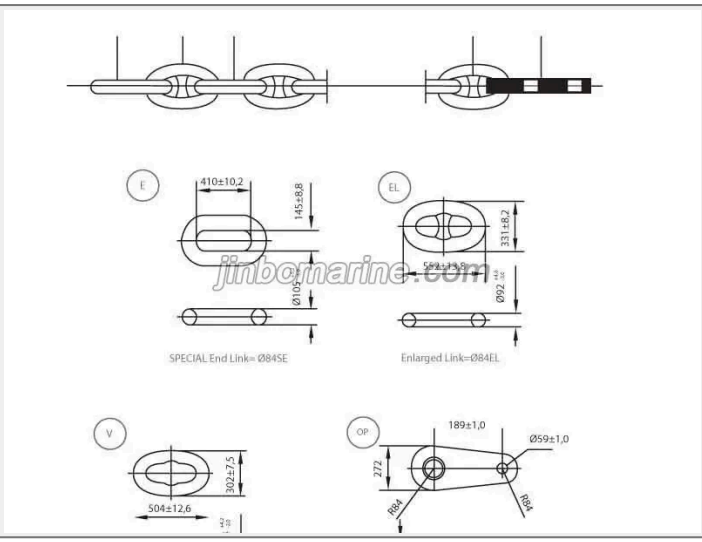

0.048719s