Jinbo Marine

Marine & Offshore Equipment Datasheet

PRODUCT DATASHEET

MARINE ELECTRICAL INSTRUMENT

JN-96 Electric Pulse Tachometer

JN-96 Electric Pulse Tachometer Size:96X96X114 Working power:DC24V Measuring range:0~800R/MIN   Speed measurement for main and auxiliary engine JN-96 Electric Pulse Tachometer Drawing

ISO9001 Supplier

Class Certificate

Export Supply

Key Highlights

Category	Marine Electrical Instrument
Standard	EN
Weight / Size	JN-96 Electric Pulse Tachometer Size:96X96X114 Working power:DC24V Measu...
Certificate	ABS, LR, BV, DNVGL, NK, KR, IRS, RMRS, CCS

We can supply according to your requirement, drawings, class certificate needs, and delivery schedule.

Technical Specifications

Category	Marine Electrical Instrument	Model / SKU	JN-96-Electric-Pulse-Tachometer
Standard	EN	Weight / Size	JN-96 Electric Pulse Tachometer Size:96X96X114 Working power:DC24V Measuring range:0~800R/MIN Speed measurement for main and auxiliary engine JN-96 Electric Pulse Tachometer Drawing
Certificate	ABS, LR, BV, DNVGL, NK, KR, IRS, RMRS, CCS	Warranty	12 Months unless specified otherwise
Origin	China		

CONTENTS

- JN-96 Electric Pulse Tachometer
- JN-96 Electric Pulse Tachometer Drawing

0.087162s

JN-96 Electric Pulse Tachometer

Size:96X96X114
Working power:DC24V
Measuring range:0~800R/MIN
Speed measurement for main and auxiliary engine

JN-96 Electric Pulse Tachometer Drawing

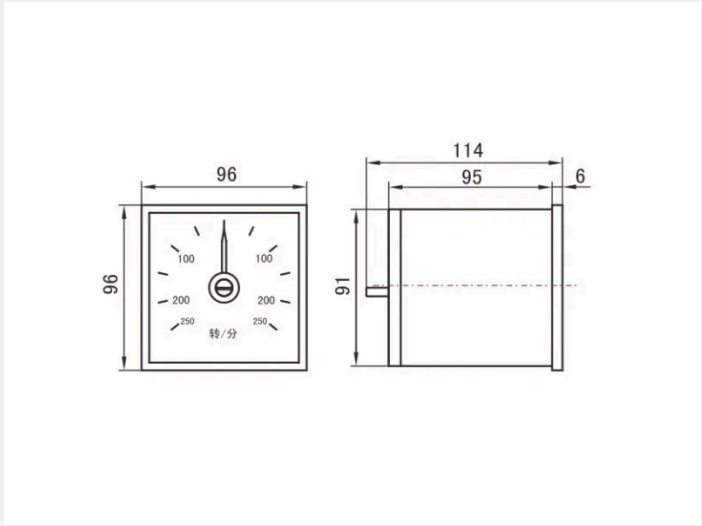

0.087162s