Jinbo Marine

Marine & Offshore Equipment Datasheet

PRODUCT DATASHEET

TALKBACK SYSTEM

K2102A/C Speaker Talkback Staion

K2102A/C Speaker Talkback Staion Power supply:AC220V/DC24V Talkback station Output power: ≥8W/8Ω Power consumption:≤15W Protection class: IP56

ISO9001 Supplier

Class Certificate

Export Supply

Key Highlights

Category	Talkback System
Certificate	ABS, LR, BV, DNVGL, NK, KR, IRS, RMRS, CCS

We can supply according to your requirement, drawings, class certificate needs, and delivery schedule.

Technical Specifications

Category	Talkback System	Model / SKU	K2102A-C-Speaker-Talkback-Staion
Certificate	ABS, LR, BV, DNVGL, NK, KR, IRS, RMRS, CCS	Warranty	12 Months unless specified otherwise
Origin	China		

China K2102A/C Speaker Talkback Staion:

K2102A/C Speaker Talkback Staion

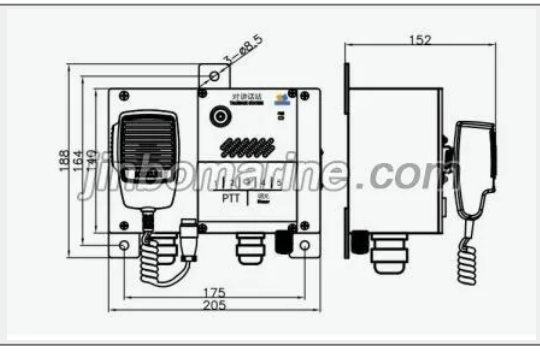

0.075557s

Power supply:AC220V/DC24V

Talkback station Output power: ≥8W/8Ω

Power consumption:≤15W

Protection class: IP56

0.075557s