Jinbo Marine

Marine & Offshore Equipment Datasheet

PRODUCT DATASHEET

CKY MARINE PUBLIC ADDRESS SYSTEM

KT-2K Flush Type Electric Turntable Controller

ISO9001 Supplier

Class Certificate

Export Supply

KT-2K Flush Type Electric Turntable Controller Power supply: AC220V/DC24V Rotaryangle: anticlockwise 150°(five shifts as 30°60°、90°、120°、150°)   &nb...

Key Highlights

Category	CKY Marine Public Address System
Weight / Size	black (RAL 9005) IP class:IP20 Weight:1.6Kg Power:≤35W
Certificate	ABS, LR, BV, DNVGL, NK, KR, IRS, RMRS, CCS

We can supply according to your requirement, drawings, class certificate needs, and delivery schedule.

Technical Specifications

Category	CKY Marine Public Address System	Model / SKU	KT-2K-Flush-Type-Electric-Turntable-Controller
Weight / Size	black (RAL 9005) IP class:IP20 Weight:1.6Kg Power:≤35W	Certificate	ABS, LR, BV, DNVGL, NK, KR, IRS, RMRS, CCS
Warranty	12 Months unless specified otherwise	Origin	China

China KT-2K Flush Type Electric Turntable Controller:

KT-2K Flush Type Electric Turntable Controller

0.072454s

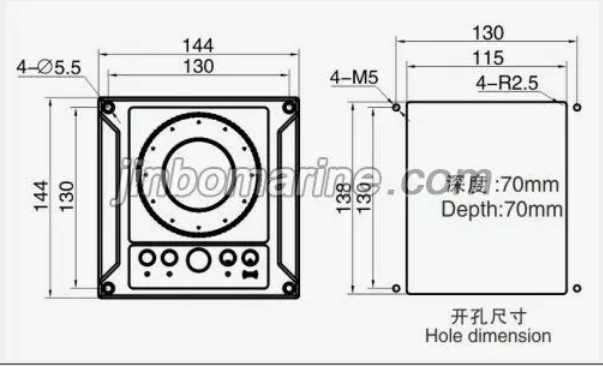

Power supply: AC220V/DC24V

Rotaryangle: anticlockwise 150°(five shifts as 30°60°、90°、120°、150°)

clockwise 150°(five shifts as 30° 60° 90°、120°、150°)

Color: black (RAL 9005)

IP class:IP20

Weight:1.6Kg

Power:≤35W

0.072454s