MARINE CHOCK

Triangle Type Chock

The chocks are widely used for small boats and different vessels, such as container vessel, tankers, bulk carriers, tug, dry cargo vessels, etc.

ISO9001 Supplier

Class Certificate

Export Supply



Key Highlights

Category	Marine Chock
Standard	EN
Certificate	CCS,BV,ABS,mill certificate etc.

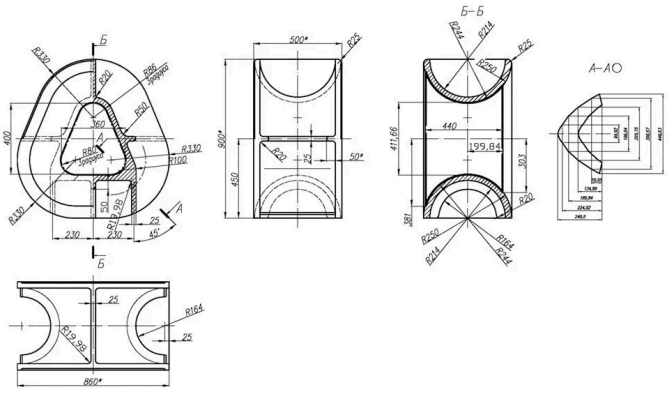
We can supply according to your requirement, drawings, class certificate needs, and delivery schedule.

Technical Specifications

Category	Marine Chock	**Model / SKU**	Triangle-Type-Chock
Standard	EN	**Certificate**	CCS,BV,ABS,mill certificate etc.
Warranty	12 Months unless specified otherwise	**Origin**	China

China Triangle Type Chock:

The chocks are widely used for small boats and different vessels, such as container vessel, tankers, bulk carriers, tug, dry cargo vessels, etc.


Б
R330
R32
R86
R40
160
400
A
R330
R100
R330
50
25
25
230
230
45
Б
25
R164
619.36
25
860*
500*
R25
800*
450
R20
25
50*
Б–Б
R214
R214
R32
R250
440
411.66
199.84
303
361
R20
R250
R214
R164
R214
А–АО