Jinbo Marine

Marine & Offshore Equipment Datasheet

PRODUCT DATASHEET

CKY MARINE PUBLIC ADDRESS SYSTEM

YDC-D Speaker

YDC-D Speaker Rated output power and sound pressure level: 0.5W/78dB±3dB   1W/80dB±3dB 2W/84dB±3dB 3W/87dB±3dB 5W/92dB±3dB Color: White (RAL1013) &...

ISO9001 Supplier

Class Certificate

Export Supply

Key Highlights

Category	CKY Marine Public Address System
Standard	EN
Weight / Size	White (RAL1013) IP class:IP55 Stuffing box cable entrance hole size:
Certificate	ABS, LR, BV, DNVGL, NK, KR, IRS, RMRS, CCS

We can supply according to your requirement, drawings, class certificate needs, and delivery schedule.

Technical Specifications

Category	CKY Marine Public Address System	Model / SKU	YDC-D-Speaker
Standard	EN	Weight / Size	White (RAL1013) IP class:IP55 Stuffing box cable entrance hole size:
Certificate	ABS, LR, BV, DNVGL, NK, KR, IRS, RMRS, CCS	Warranty	12 Months unless specified otherwise
Origin	China		

China YDC-D Speaker:

YDC-D Speaker

0.077771s

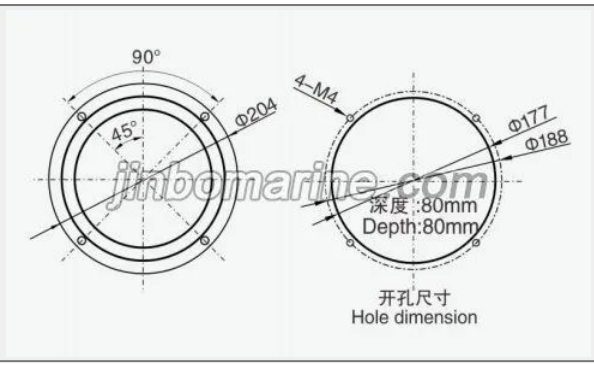

Rated output power and sound pressure level:

0.5W/78dB±3dB 1W/80dB±3dB

2W/84dB±3dB 3W/87dB±3dB

5W/92dB±3dB

Color: White (RAL1013)

IP class:IP55

Stuffing box cable entrance hole size: 2-Φ14mm

Weight: 0.9Kg

0.077771s