STEEL CARGO BLOCK

Ball Bearing Blocks HL Series A

Drawing: Specification: stock no. will(t) wire(mm) dimensions(mm) weight(kg) D1 D2 ...

ISO9001 Supplier

Class Certificate

Export Supply

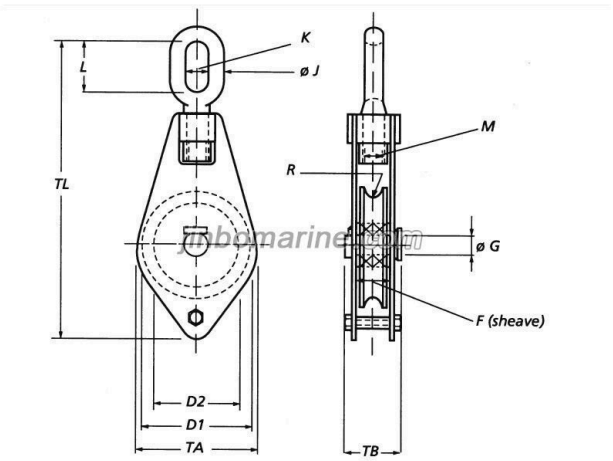

Key Highlights

Category	Steel Cargo Block
Standard	EN
Weight / Size	will(t) wire(mm) dimensions(mm) weight(kg) D1 D2 F ΦG ΦJ K L M R TA TB T...
Certificate	ABS, LR, BV, DNVGL, NK, KR, IRS, RMRS, CCS

We can supply according to your requirement, drawings, class certificate needs, and delivery schedule.

Technical Specifications

Category	Steel Cargo Block	**Model / SKU**	Ball-Bearing-Blocks-HL-Series-A
Standard	EN	**Weight / Size**	will(t) wire(mm) dimensions(mm) weight(kg) D1 D2 F ΦG ΦJ K L M R TA TB TL 15.150.03.10 3 20 150 120 32 30 21 32 72 30 11 160 75 385 10 Product Advantage:
Certificate	ABS, LR, BV, DNVGL, NK, KR, IRS, RMRS, CCS	**Warranty**	12 Months unless specified otherwise
Origin	China		

CONTENTS

- Drawing:
- Product Advantage:
- How to Order?
- Specification:
- Packing and Delivery：

Drawing:

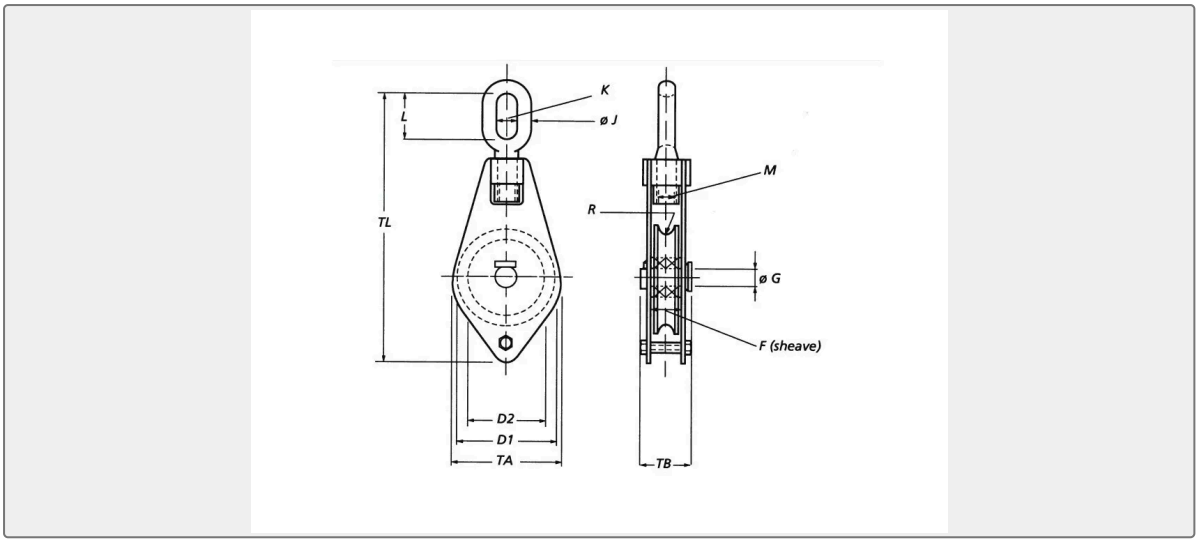

Specification:

stock no.	will(t)	wire(mm)	dimensions(mm)											weight(kg)
			D1	D2	F	ΦG	ΦJ	K	L	M	R	TA	TB	TL	
15.150.03.10	3	20	150	120	32	30	21	32	72	30	11	160	75	385	10

Product Advantage:

1.Satisfactory Quality
2.Competitive Price
3.Prompt Delivery
4.7x24 hours service

Packing and Delivery：

1. Standard Export Packing or Seaworthy Packing, if you have special requirement, please specify when inquiry.
2. Fast Delivery, delivery time can negotiate when order.

How to Order?

1. Please inform us the model, type or size you need.
2. Please inform us the quantity to make the best price for you.
3. Shipment Model: Air or Sea shipment.
4. Special requirement if any.