JIS MARINE GLOBE VALVE

Marine Bronze Screw Down Check Globe Valve JIS F7351 5K

ISO9001 Supplier

Class Certificate

Export Supply

Design Standard: JIS F7351-1996 Test Standard: JIS F7400-1996 Test Pressure: Body-1.05Mpa, Seat-0.77Mpa Flange Size as per JIS F2220-5K *DN15-DN40 with screwed bonnet, DN50-DN65 with bolted bonnet...

Loading product image...

Key Highlights

Category	JIS Marine Globe Valve
Standard	JIS
Material	Bronze
Weight / Size	Body-1.05Mpa, Seat-0.77Mpa Flange Size as per JIS F2220-5K *DN15-DN40 wi...
Certificate	CCS,DNV,GL, LR, ABS, BV, NK,KR,RINA

We can supply according to your requirement, drawings, class certificate needs, and delivery schedule.

Technical Specifications

Category	JIS Marine Globe Valve	**Model / SKU**	Marine-Bronze-Screw-Down-Check-Globe-Valve-JIS-F7351-5K
Standard	JIS	**Material**	Bronze
Weight / Size	Body-1.05Mpa, Seat-0.77Mpa Flange Size as per JIS F2220-5K *DN15-DN40 with screwed bonnet, DN50-DN65 with bolted bonnet *Marine Bronze Screw Down Check Globe Valve also can be called as marine bronze SDNR Globe valve or SDNR valve, globe check valve, stop check valve.	**Certificate**	CCS,DNV,GL, LR, ABS, BV, NK,KR,RINA
Warranty	12 Months unless specified otherwise	**Origin**	China

CONTENTS

- China Marine Bronze Screw Down Check Globe Valve JIS F7351 5K:
- Main Size List(mm):
- Main Material:

China Marine Bronze Screw Down Check Globe Valve JIS F7351 5K:

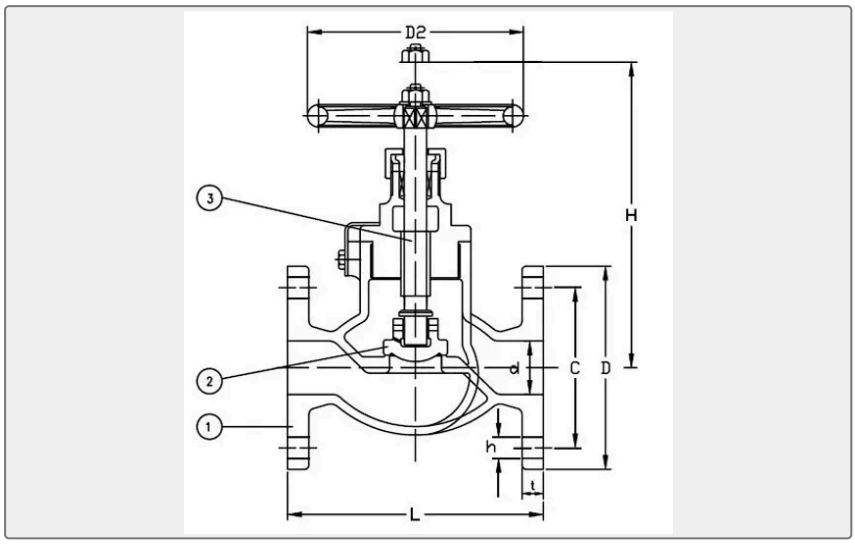

Design Standard: JIS F7351-1996

Test Standard: JIS F7400-1996

Test Pressure: Body-1.05Mpa, Seat-0.77Mpa

Flange Size as per JIS F2220-5K

*DN15-DN40 with screwed bonnet, DN50-DN65 with bolted bonnet

*Marine Bronze Screw Down Check Globe Valve also can be called as marine bronze SDNR Globe valve or SDNR valve, globe check valve, stop check valve.

Main Material:

1-Body: Bronze (BC6)

2-Disc:Bronze (BC6)

3-Stem: Brass (C3771BD)

4-Bonnet:Bronze (BC6)

5-Handwheel: Cast Iron (FC200)

Main Size List(mm):

IMPA Code	Size	Face to Face (L)	Flange diam. (D)	Pitch (C)	No of Bolt Hole	h	t	H	D2
751051	15	100	80	60	4	12	9	130	80
751052	20	110	85	65	4	12	10	140	100
751053	25	120	95	75	4	12	10	160	125

751054	32	140	115	90	4	15	12	170	125
751055	40	160	120	95	4	15	12	190	140
751056	50	210	130	105	4	15	14	235	140
751057	65	250	155	130	4	15	14	260	160