MARINE ELECTRIC MOTOR

YCTJ-H Series Fan-Closed Three Phase Induction Marine Motor

ISO9001 Supplier

Class Certificate

Export Supply

Introduction YCTJ-H series three phase induction motor can be totally enclosed.fan-closed three phase induction motor that can be used on marine .civil cooperating with marine .this series work as power supply for...

Key Highlights

Category	Marine Electric Motor
Standard	DIN
Weight / Size	Type designation Operating Conditions Temperature of Ambient air 0℃ ~45℃...
Certificate	CCS/LR/DNV/KR

We can supply according to your requirement, drawings, class certificate needs, and delivery schedule.

Technical Specifications			
Category	Marine Electric Motor	**Model / SKU**	YCTJ-H-Series-Fan-Closed-Three-Phase-Induction-Marine-Motor
Standard	DIN	**Weight / Size**	Type designation Operating Conditions Temperature of Ambient air 0℃ ~45℃ Altitude 0M Relative humidity ≤ 95% Dew exists Oil mist exists Fungus exists Shock exists Vibration exists Inclination and swing ±22.5° Rated voltage and frequency 50HZ.380V or 60HZ.440V Connection Δ(Y) Duty type continuous (S1)or S2-30 type Insulation B or F Temperature rise of winding 75K or 100K Permissible working temperature of bearing 90℃ (thermometer method) Type of starting Direct on full-voltage starting for all sizes;
Surface	5/86 740 680 800 750 680 1035 1675 355L 1675 400M FF940 90/110 210 22/28 81/100 940 880 1000 28 980 920 1010 1720 annotate： a) R is distance from fitting surface of flange to shaft shoulder.	**Certificate**	CCS/LR/DNV/KR
Warranty	12 Months unless specified otherwise	**Origin**	China

CONTENTS

- Introduction
- Vibration and Noise
- Frame Size
- table 2
- Operating Conditions
- table 1
- The effective values of vibration velocity mm/s
- output kW

Introduction

YCTJ-H series three phase induction motor can be totally enclosed.fan-closed three phase induction motor that can be used on marine .civil cooperating with marine .this series work as power supply for warship. motor for side thruster radiator .This series has low strat current and high start torque,Every performance is better than any other motors which has same specification.The motors are completely according with the requirement of the following standards and specifications.

Type designation

Operating Conditions

Temperature of Ambient air 0℃ ~45℃

Altitude 0M

Relative humidity ≤ 95%

Dew exists

Oil mist exists

Fungus exists

Shock exists

Vibration exists

Inclination and swing ±22.5°

Rated voltage and frequency 50HZ.380V or 60HZ.440V

Connection Δ(Y)

Duty type continuous (S1)or S2-30 type

Insulation B or F

Temperature rise of winding 75K or 100K

Permissible working temperature of bearing 90℃

(thermometer method)

Type of starting Direct on full-voltage starting for all sizes; reduced voltage starting allowable at no load .

Vibration and Noise

The effective values of vibration velocity, measured at the no-load conditions, does not exceed those given in table 1.

table 1

Frame Size	The effective values of vibration velocity mm/s
160~225	2.8
250~355	3.5
400 and above	4.5

The following table 2 is showed about the noise condition when the motor is no-load

table 2

output kW	Synchronous speed r/min					
	3600	3000	1500、1800	1000、1200	750、900	600、720
	sound power level dB (A)					
4	—	—	—	—	69	—
5.5					69	
7.5				75	72	
11	87	87	82	75	72	
15	87	87	82	78	75	
18.5	87	87	82	78	75	
22	92	92	82	78	78	
30	95	95	84	81	78	
37	95	95	84	81	78	
45	97	97	84	84	78	87
55	97	97	86	84	81	87
75	99	99	92	90	87	87
90	99	99	92	90	87	92
110	104	104	98	92	87	92
132	105	104	101	92	99	92
160	105	104	101	102	99	97
200	105	104	101	102	99	97
250	113	111	108	105	101	99
315	113	111	108	108	105	101
355	115	113	111	111	105	101
400	115	113	111	111	108	—
450	116	113	111	111	—	
500	118	116	115	—		
560	118	116	115			

Technical Data

The protection of the frame size and the output are IP23 should cooperate with the table3,And the IP44 is cooperate with table4.

table3

frame size	number of poles				
	2	4	6	8	10
	power kW				
160M	15	11	7.5	5.5	—
160L1	18.5	15	11	7. 5	
160L2	22	18.5	—	—	
180M	30	22	15	11	
180L	37	30	18.5	15	
200M	45	37	22	18.5	
200L	55	45	30	22	
225S	75	55	37	30	
225M	90	75	45	37	
250M	110	90	55	45	
280S	—	110	75	55	
280M	132	132	90	75	
315S	160	160	110	90	55
315M	200	200	132	110	75
315L	250	250	160	132	90
355M	315	315	200	160	110
355L	355	355	250	200	132
400M1	400	400	315	250	160
400M2	450	450	355		200
400L1	500	500	400	315	250
400L2	560	560	450	355	315

table4.

Frame Size	Number of poles				
	2	4	6	8	10
	output kW				
160M1	11	11	7.5	4	—
160M2	15			5.5	
160L	18.5	15	11	7.5	
180M	22	18.5	—	—	
180L	—	22	15	11	
200L1	30	30	18.5	15	
200L2	37		22		
225S	—	37	—	18.5	
225M	45	45	30	22	
250M	55	55	37	30	
280S	75	75	45	37	
280M	90	90	55	45	
315S	110	110	75	55	45
315M	132	132	90	75	55
315L1	160	160	110	90	75
315L2	200	200	132	110	90
355M1	250	250	160	132	110
355M2			200	160	132
355L	315	315	250	200	160
400M1	355	355	280	220	200
400M2	400	400	315	250	
400M3	450	450	—	—	

The mounting of this series is IMV1,mounting and overall dimension for motors of various mounting arrangements are shown respectively by figure below and table 5 ~ 6.

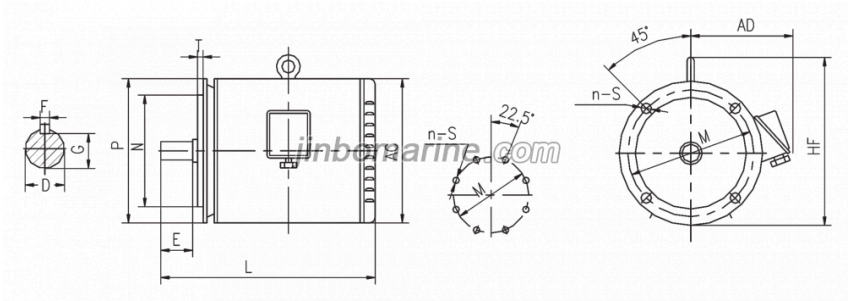

Table 5 The Motors that end shield existing flange but the frame without foot(IP23) unit:mm

Frame Size	Flange size	Mounting dimension and tolerance											Overall dimension			
		D	E	F	G	M	N	P	R	S	T	n	AC	AD	HF	L

160M	FF300	42	110	12	37	300	250	350	0	19	ф1.5M	5.0	4	325	270	450	660
160L																	705
180M		48		14	42.5									360	290	490	730
180L																	765
200L	FF350	55		16	49	350	300	400						400	355	550	840
225S	FF400	55/60	110/140	18	49/53	400	350	450					8	450	370	610	890
225M																	865/915
250M	FF500	60/65	140		53/58	500	450	550						495	455	640	995
280S		65/75		18/20	58/67. 5									550	470	720	1090
280M																	1140
315S	FF600	65/80	170	18/22	58/71	600	550	660		24	ф2.0M	6.0		645	576	900	1390
315M																	1490
315L																	1490
355M	FF740	75/95		22/25	67. 5/86	740	680	800						750	680	1035	1675
355L																	1675
400M	FF940	90/110	210	22/28	81/100	940	880	1000		28				980	920	1010	1720

annotate：
a) R is distance from fitting surface of flange to shaft shoulder.
b) Numerator is a data of two poles, Denominator is a data of more than four poles.

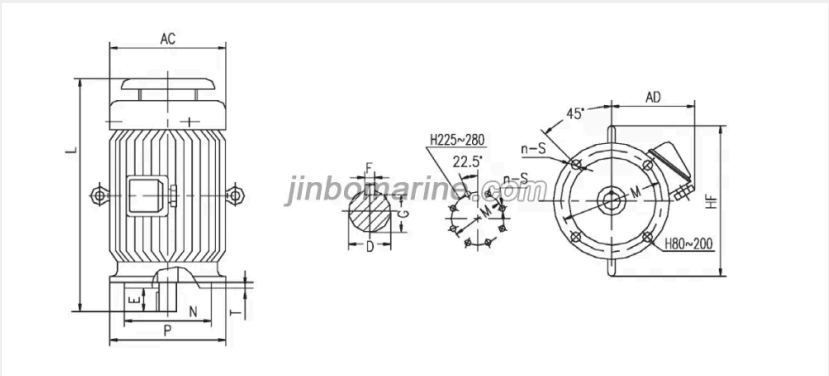

Table 6 The Motors that end shield existing flange but the frame without foot(IP44) unit:mm

Frame Size	Flange size	Mounting dimension and tolerance												Overall dimension			
		D	E	F	G	M	N	P	R	S		T	n	AC	AD	HF	L
160M	FF300	42	110	12	37	300	250	350	0	19	ф1.5M	5.0	4	325	270	450	660
160L																	705
180M		48		14	42.5									360	290	490	730
180L																	765
200L	FF350	55		16	49	350	300	400						400	355	550	840
225S	FF400	55/60	110/140	18	49/53	400	350	450					8	450	370	610	890
225M																	865/915
250M	FF500	60/65	140		53/58	500	450	550						495	455	640	995
280S		65/75		18/20	58/67. 5									550	470	720	1090
280M																	1140
315S	FF600	65/80	170	18/22	58/71	600	550	660		24	ф2.0M	6.0		645	576	900	1390
315M																	1490
315L																	1490
355M	FF740	75/95		22/25	67. 5/86	740	680	800						750	680	1035	1675
355L																	1675
400M	FF940	90/110	210	22/28	81/100	940	880	1000		28				980	920	1010	1720

annotate：
a) R is distance from fitting surface of flange to shaft shoulder.
b) Numerator is a data of two poles, Denominator is a data of more than four poles.